INSTALLATION INSTRUCTIONS
FOR BATH AND BATH WALL LINER

GENERAL Prior to fitting your bath make sure the flooring is sound and secure and can take the weight of a bath full of water. Ensure all piping for the waste, tapware and shower rose has been fitted and is in the correct location. The maximum height of the liner above the bath is finished bath height, plus 1500mm.

The bath will need to be recessed into the wall studs at a specified depth to obtain a consistent finish between the bottom edge of the wall liner where it meets the bath.

A glass panel will then be fitted into solid fixing on the end wall of the bath. Check that solid fixing is available or add nogs accordingly.

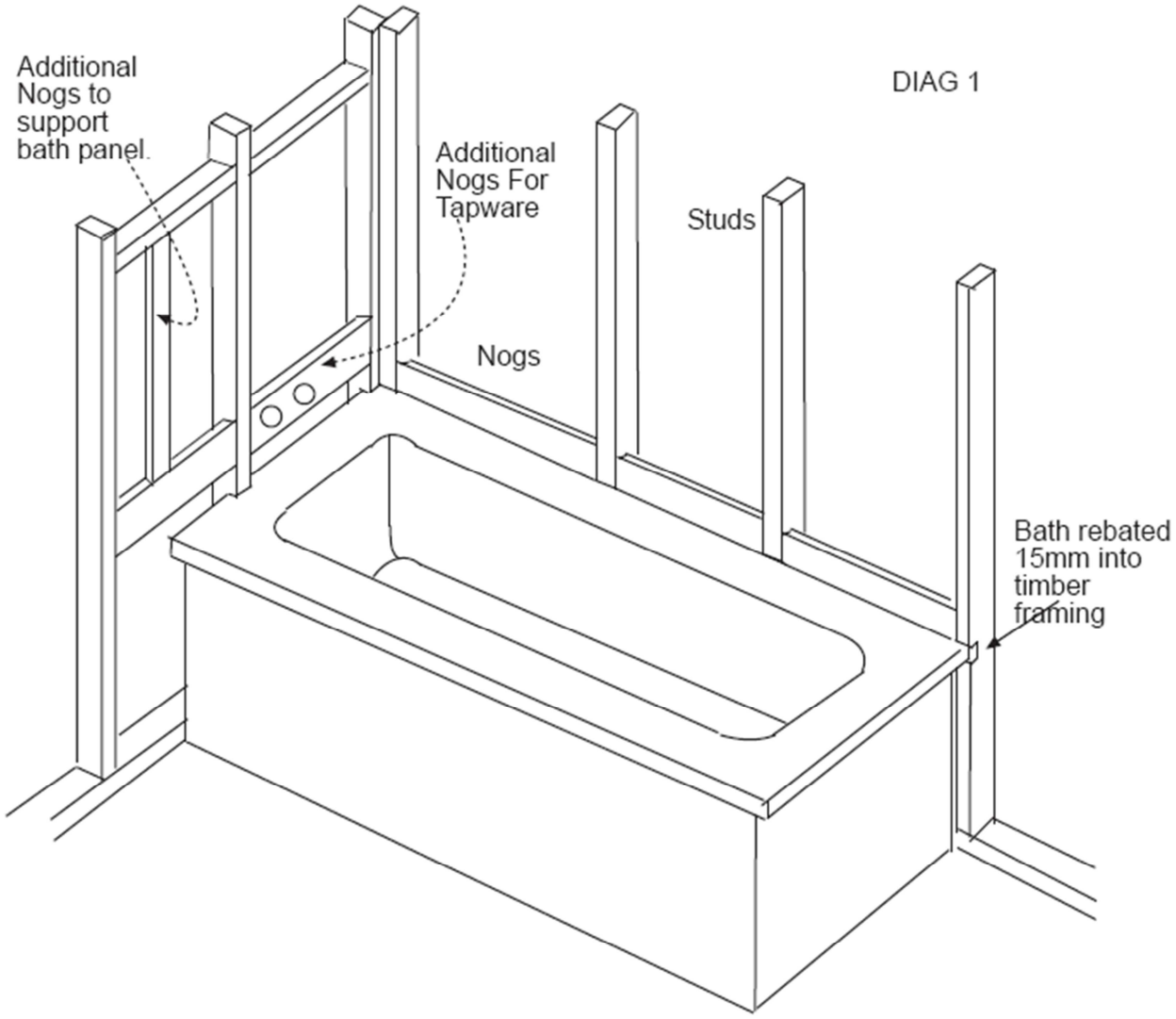

PARTS LIST

Stylus Bath	4 x Tubes of Glue
Newline Wall Liner	1x Tube of Silicone

RECEIVING YOUR BATH AND WALL LINER

Unpack the goods and check that they are in good condition and before installation commences ensure sufficient protection is placed inside the bath and on its surfaces to protect it from possible scratching during installation. Leave protection in place until the bathroom has been completed. The plastic covering that is supplied attached to the bath is not sufficient protection and any scratches or cracking that occur during installation are not covered by the product warranty.

INSTALLING YOUR BATH

Dry fit the bath in position. If the walls have already been lined, make sure that adequate nogging has been provided for all plumbing fixtures, to provide support for the edges of the lining e.g gib board and fixing of the glass panel if required. When dry fitting the bath make sure it is at the correct finished height and correct level before any rebates are cut into the studs as shown in Diagram 1.

Once the bath is in position mark around the top line of the bath onto the wall lining (or studs, if exposed) and cut a rebate 15mm deep into the studs, with a clearance height for the thickness of the bath rim (15mm does not include lining, cut 15mm into the timber) See diagram 2 and 1.
Once the studs have been notched, fix the bath to the studs and in position on a bed of slurry, polystyrene or foam packer, or other suitable method that complies with the building code and good trade practice, making sure the waste can be connected and the bath is level and square.

BATH BASE SUPPORT

Strip supported bath.
Bath must be installed on a bed of polystyrene, foam or mortar slurry, with 3:1 ratio of sand:cement ensuring a stiff consistency, not a sloppy mix. The entire bath should be forced down into the bed of slurry until the sides of the bath are embedded to a depth of 50-70mm. See Diagram 2.

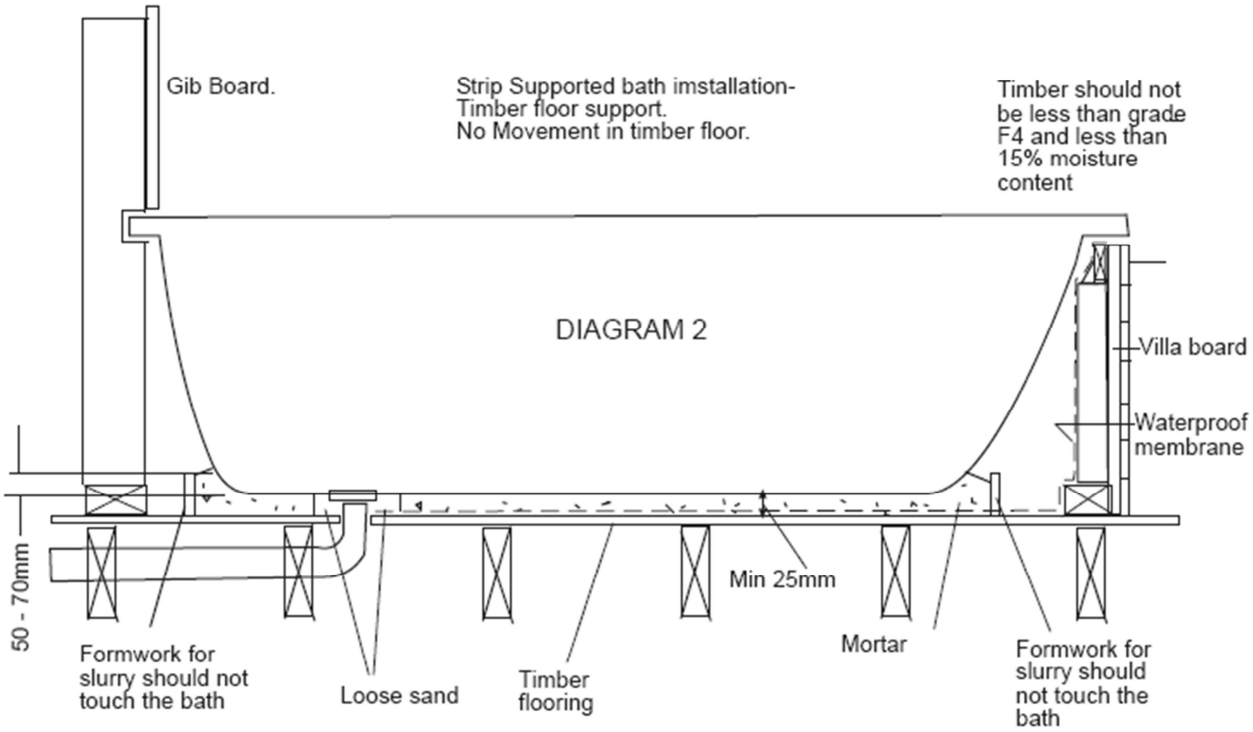

WALL SECTION INSTALLATION -

Timber framing.
Install the bath using the method shown in Diagram 3.

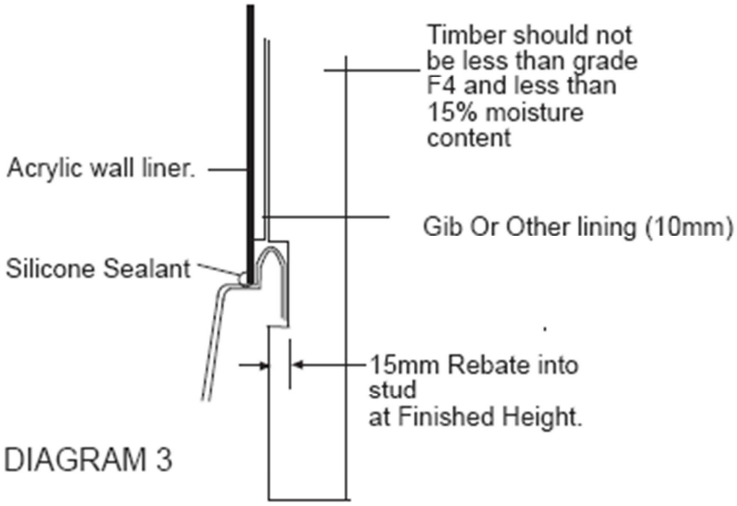

DIAGRAM 3

BATH FRONT INSTALLATION -

Flush front timber instalation may use the following method . Diagram 4

DIAGRAM 4

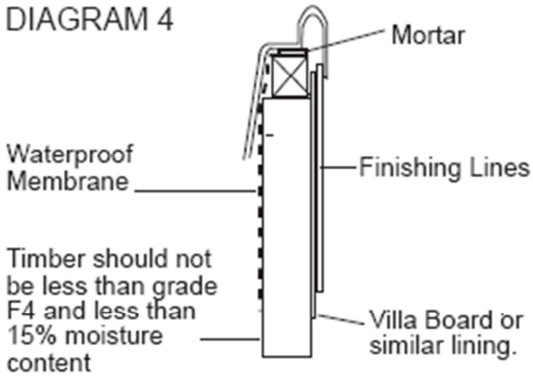

WATER TESTING
Water test your bath prior to enclosing to ensure that it drains correctly. NO Claims for non draining baths will be valid after the unit is enclosed or tiled.

DRILLING AND REPAIRS
When drilling for tapware or plumbing fittings, use a fine tooth hole saw at less than 1000 RPM.

REPAIRS
Scratches or cigarette burns can be improved with 1200 grade wet and dry sandpaper, then repolished with “Brasso” polishing compound, used in a circular motion.

CLEANING YOUR BATH

1. Clean with a soft cloth and warm soapy water, to wash away any body oils or soap residues that form a ring or tide mark.
2. As a weekly cleaner we recommend warm soapy water or any liquid cleaner. Do not use powder, paste, cream cleaners, thinners, window or glass cleaning sprays or dry cleaning liquid etc
3. Stubborn marks or fine scratches may be polished out with Brasso.
4. When coloured essential oils are used, first test that the colour will not stain your bath. If it does, use Brasso to remove it. Always add oils into the bath full of water, never pour them into an empty bath.

INSTALLING THE ACRYLIC LINER

Once bath has been installed, install the required grade of wall lining and make adequate markings for the piping and cutting holes for the required fittings.

Dry fit the acrylic liner against the wall ensuring it fits down on to the surface of the bath (not on top of the rolled edge see diagram 3).

Scribe and fit the bath liner over the raised/rolled edge of the bath on external corners to allow the liner to drop down inside the lip and rest on the top of the bath.

Trim any excess material off the vertical edges of the liner if they protrude beyond the edges of the bath. Mark and cut hole for fittings as required and mark the external perimeter of the liner on the wall. Apply glue on the wall liner as shown below, with the glue bead application vertical to the liner and approx 60mm part. Apply glue within the marked area and around the plumbing fittings. See diagram 5.

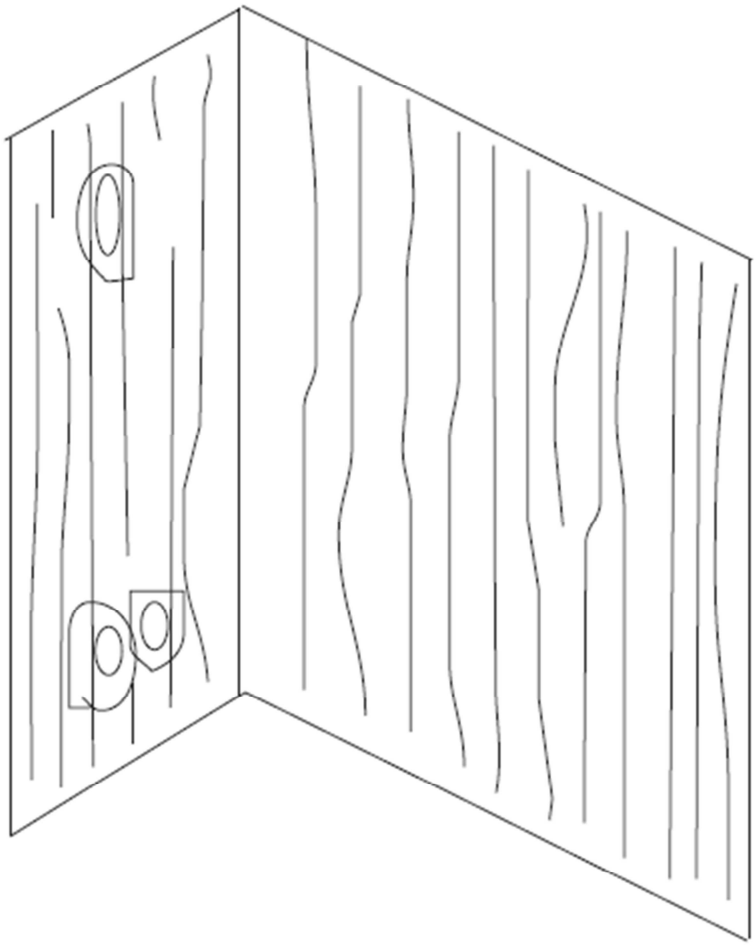

DIAGRAM 5

Glue lines on wall at 60mm centres, and around holes cut for plumbing fittings.

Press the liner firmly all over the surface and rub over the sheet using a soft cloth to make sure no air is trapped behind the liner. Brace the liner to hold in position if necessary.

To fit the glass bath panel refer to the instruction included with the bath panel product.

INSTALLATION INSTRUCTIONS
FOR VENICE BATH PANEL

GENERAL These doors can be fitted to the edge of acrylic baths. The bottom pivot must be supported on the bath. Where the bath has a flat surface the unit should be installed as close as possible toward the inside edge of the bath and where the bath has a rolled edge, the wall profile should be placed flush with the outside edge of the bath and the bottom pivot should be supported directly on the rolled edge of the bath.

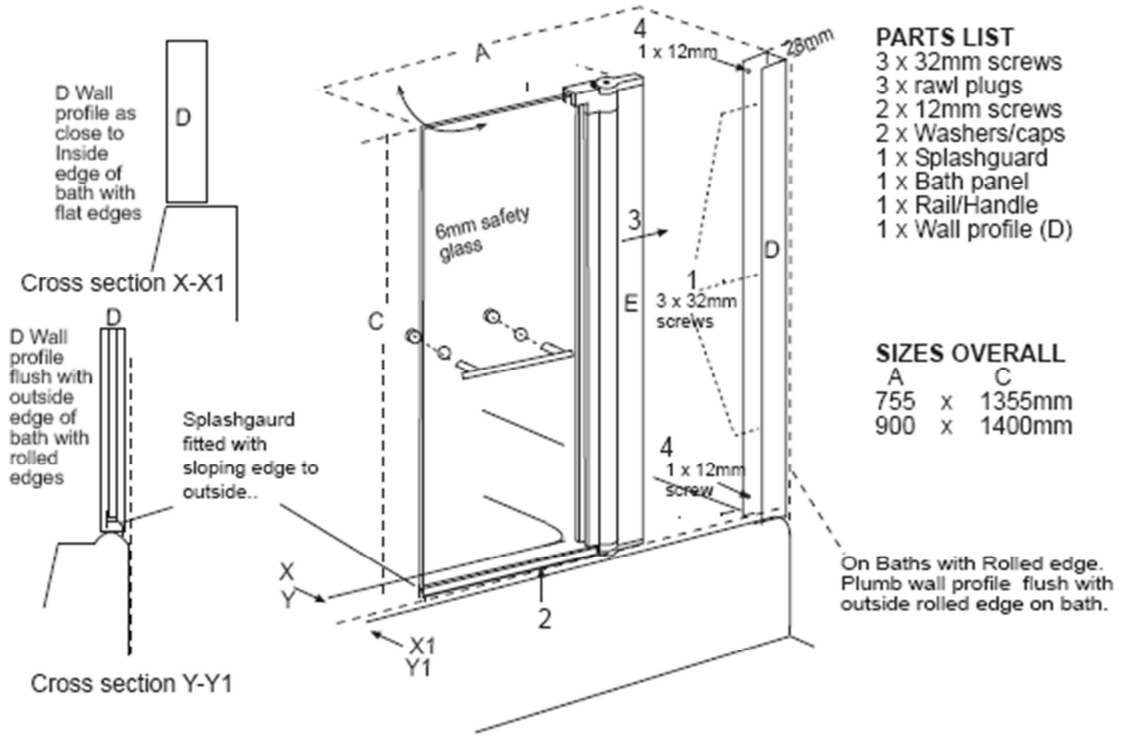

NB: Do not suspend the unit above the bath, the bottom pivot must be in contact with the bath surface.

STEP 1 **On baths with a flat edge surround,** see cross section X-X1 above, mark a plumbline up the wall at the end of the bath, as close to the inside edge of the bath as possible and install the wall profile (D) into solid fixing. Silicone the wall profile to the wall before screwing home, then silicone wall profile (D) from top to bottom and along the bottom outside edge.. **On baths with a rolled edge**, see cross section Y-Y1 above, place the wall profile vertically on the wall, with the outside edge flush with the outside face of the rolled edge of the bath. Install into solid fixing or use rawl plugs and32mm screws provided.

STEP 2 Fit the splashguard to the bottom of the glass panel (2), with the single vertical edge of the seal to the inside of the bath and the sloping face of the seal on the outside of the panel. See cross section Y-Y1.

STEP 3 Slide glass panel (3) into wall profile. Make sure the bottom pivot is supported on the bath and adjust within the wall profile so that the panel is parallel to bath across the bottom edge.

STEP 4 Secure panel with 12mm screws with washers and screw cap covers through the wall profile (D) into the extrusion (E), which supported the pivoting glass panel. Fix at top and bottom on the inside of the bath panel. Fit the handle to the glass panel. Silicone the bottom edge of the pivot mount to the bath on the outside joint only.